Hera II technical



HALLBERG-RASSY 352 DATA SHEET

Designers	Christoph Rassy / Olle Enderlein
Hull length	10.54 m / 34'9"
Waterline at rest	8.70 m / 28' 7"
Beam	3.38 m / 11'1"
Draft, empty standard boat	1.67 m / 5'6"
Displacement, empty standard boat	6 700 kg / 14 770 Lbs
Keel weight	3 tons
Keel type	Incapsulated steel in deep bilge
Headroom saloon	1.85 m / 6'

Sail area with jib	52.5 m²
Sail area with genoa	64 m²
Air draft, standard rig, ex Windex	14.53 m / 47' 8"
Air draft, tall rig, ex Windex	15.63 m / 51' 3"
Volvo Penta engine	MD 21, 2003 Turbo, MD 22
Power for 2003T at crank shaft	32 kW / 43 HP
Diesel	240 litres / 63.4 US gallon
Fresh water	300 litres / 79 US gallon
Transport height with windscreen	3.70 m / 12' 2"
Transport height without windscreen	3.31 m / 10' 10"

Production number 739 from 1989. The mast itself is 14.0 m so we have the tall rig.
Outboard lock 1705.

In case of problems, contact Ionion Marina. They have connections in many places and can advise where to get help. Tel 26820 24305.

This document is written by Jens ,(jens.havskov@gmail.com, 00 47 99 72 92 71) and Roald (roaldska@gmail.com , 0047 906 07 732).
Last updated April, 2026 by Jens & Roald.

More information about HR including technical tips on how to do things like removing the rudder is found at https://www.hallberg-rassy.com/yachts/previous-models/hallberg-rassy-352.

Start and stop **4**
Sailing **6**
Reefing of sails 6
Anchoring **8**
Diesel **8**
Manual pump for the tank 10
Communication **13**
Motor **14**
Water **14**
Toilet **16**
Safety **18**
Life vests 18
Liferaft 18
Smoke detector 18
Gas detector 18
VHF emergency call 19
Location of valves through the hull 19
Bilge pumps 22
Electrical system **23**
Batteries 25
Monitoring the voltage of the batteries 26
State of charge of the batteries and charging voltage 29
Solar panels 30
Fuses 31
Fuses for winches and bow thruster 33
Fridge 34
Car radio and outdoor thermometer 35
Bow thruster 36
220V converter 37
Shore power 39
Instruments **40**
Plotter 41
Sonar 43
Autopilot 43
Depth and log 43
VHF 44
Other practical aspects **45**
Washboards 45

Shade 45
Tables 47
Procedures with port police and customs 48
Taking the boat on land at end of season 49
First launching of the boat in spring 50
Location of stuff 51
Spare parts 51
Tools 52
Location of other stuff 52
Storage room 52
Problems 53
No power to start motor 53
Motor difficult to start and then stops 53
Motor running irregularly or stops 54
Fridge stops 54
No fresh water 55
Last service or replacement of parts 55
Quick guide to paying TEPAI online 55

Start and stop

Before starting the motor, the two main battery switches under the stairs must be turned on. The motor is started from the motor instrument panel in the cockpit. First press on/off and when the motor check is finished and the alarm sounds, press start. Stop the motor with Stop and then on/off.



Motor control panel:

The motor seems to run very smoothly at 1800-2200 RPM. The Autoprop propeller is currently mounted. The approximate speed with the motor at different RPM is:

RPM	Speed Autoprop	Speed old prop
1100	5.3	
1200	5.4	3.5
1300	5.5	
1400	5.8	
1500	6.0	4.0
1600	6.1	
1700	6.4	
1800	6.6	
1900	6.7	
2000	6.8	5.4
2500	7.2	6.3

Sailing

When sailing the propeller must be prevented from rotating. This is usually done by putting the gear in forward. In some cases it must be put in reverse.

Reefing of sails

The jib is reefed by taking in the roller. When you do this, the jib loses its shape. This leads to a reduction in the propulsion effect of the sail greater than the reduction in area. It is therefore "smarter" to have max. reefing of the mainsail before you start furling the jib. But if it's windy enough, you must reef both sails.

The mainsail is reefed using reefing hooks 1 at the mast and by reefing lines, at the the rear part of the sail:
Start at the mast. Steer up into the wind. When the sail is almost the right height, fit one of the reefing hooks, depending on how much sail-area-reduction you need, into the loops of the sail. There are two hooks on the boom and two loops, one at each side of the sail and each one for a different amount of reefing. Then tighten the halyard as usual. Finally tighten the corresponding reefing line (red or blue, depending on how much you want to reduce the sail area, and which of the reefing loops you have put into the reefing hook) at the rear part of the sail. To tighten and fasten the reefing lines, you find equipment for this under the boom (winch).

“Drop off” and sail on with reduced sail area, gives less heeling and better speed.



Reefing hook



Reefing loop



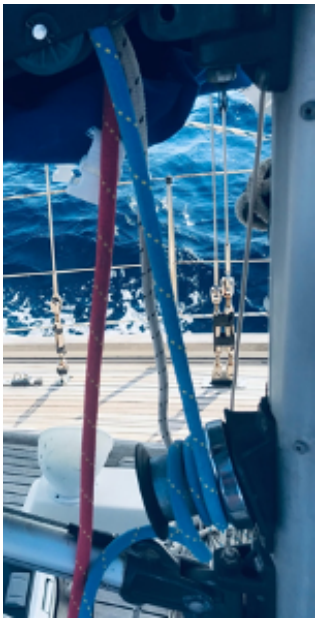

Reefing line

Reefing line, under the boom



Anchoring

When anchoring, use an anchor hook to relieve the strain on the winch (front) and winch and bathing platform (back). It is particularly important at the back since the platform is not made to hold the boat in anything other than the most quiet conditions. There is an anchor hook for 6mm and one for 10mm chain, respectively, see photo below.

If anchor lines are crossed, we have a useful tool to untangle the lines, better than just a rope, see below.



M	colour
Vater line	dark blue
10	orange
20	red
30	yellow
40	Light blue
50	white
60	green
70	pink

Anchor hooks for 6 and 10mm chain (left) and tool to untangle crossed anchor lines (right).. The anchor chain at the bow has a dimension of 10 mm and is 80 m long. The chain is marketed with colours, helping to detect how much chain you have out.

Diesel

The main diesel tank is located in the keel. It contains 150 l. The spare diesel tank is located under the left bunk (90 l). The motor operates from the main tank and the diesel from the spare tank can be moved to the main tank by opening a valve just next to the spare tank under the bunk.

There has been a leak in the connection between the two but it seems to have been fixed.. The two tanks are filled from midship, left side, front for the spare tank and back for the main tank. Both tanks have a gauge. The main tank now has a new sensor (April 2019) and should show the correct level. Since the gauge is a few cm from the bottom, there is still some left when showing empty. When the gauge shows ¼ there is about 50l left. The gauge for the spare tank seems ok. The intention is to use both tanks so old diesel is not kept in the spare tank. Currently, the spare tank is not used due to a small leak when the gauge is sitting.

The diesel goes through a prefilter with a water cup at the bottom, so it is easy to see if there is any water in the diesel, see figure below. From the prefilter, the diesel goes to the diesel feeder pump which contains a strainer. This could also be blocked but it is unlikely now that we have a prefilter. The strainer can be taken out and cleaned. After the feeder pump, the diesel goes through the fine filter mounted on the motor. Surplus diesel after the diesel pump goes back to the diesel tank.

If you run out of diesel in the main tank, put diesel from the spare tank (if used) and bleed the system. Open the bleeding screw and use the hand pump to pump until diesel comes out without air bubbles. The bleeding screw (10 mm) is not as shown in the manual but is seen in the problems section.



Diesel pre-filter, under the stairs.



The main diesel tank with hoses. The wire to the left is to the gauge for diesel level, the thick hose to the left is the air vent, the thin hose to the right top is the connection to the prefilter and the one below, the return from the motor.

Manual pump for the tank

The bottom of the diesel tank will accumulate dirt and water. This can be pumped up with a manual pump located in the cupboard below stairs, see figure below.



Manual pump for pumping up diesel from the bottom of the tank. Open the valve at the bottom of the pump before using.

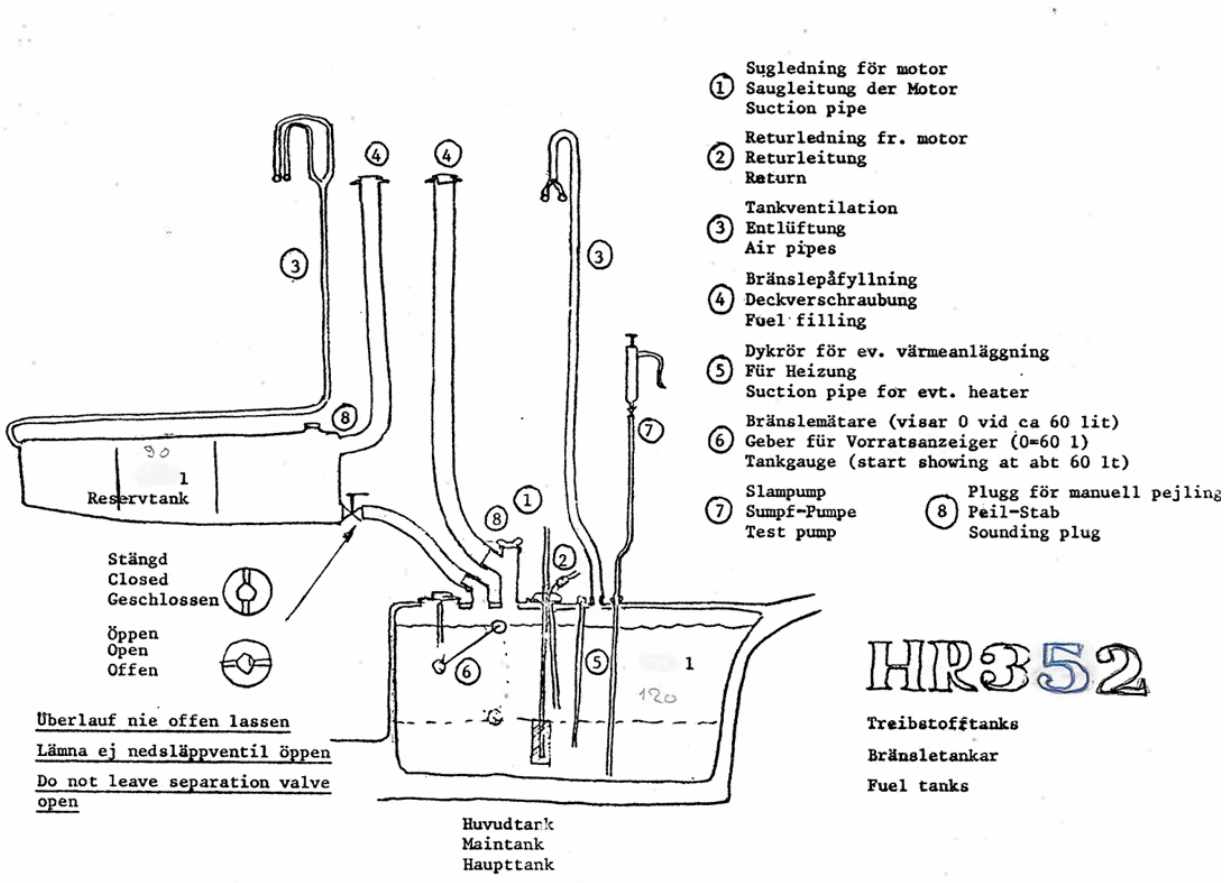

The connections for the diesel tanks, from chrome-extension://efaidnbmnnnibpcajpcglclefindmkaj/https://www.hallberg-rassy.com/fileadmin/data/resources/manuals/HR352instructionsEng.pdf

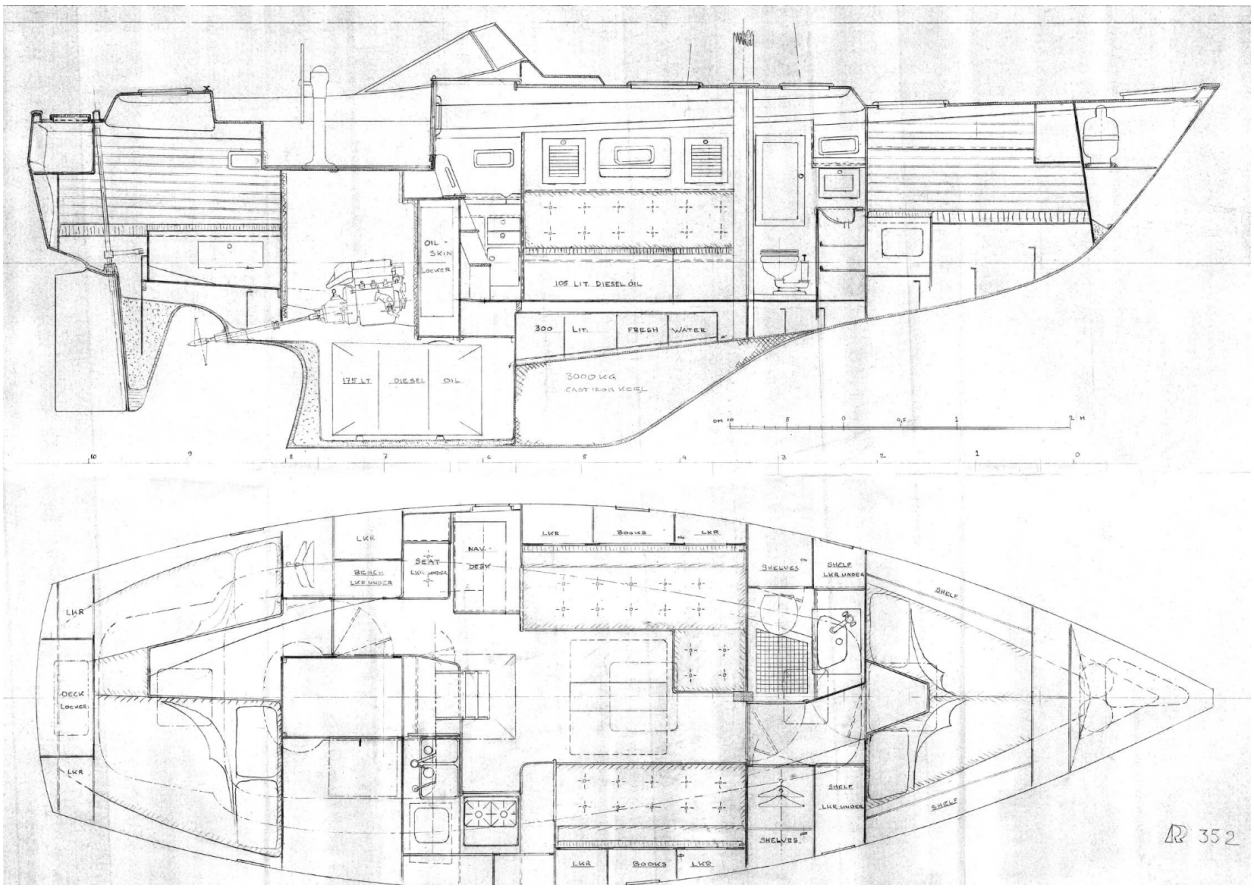

Cross section of the boat showing the location of the diesel tank.From https://www.hallberg-rassy.com/fileadmin/data/yachts/hallberg-rassy_352/downloads/HR352interior451-4.jpg

Communication

The VHF in the cockpit has been programmed with our MMSI number 257 035 130. Since the VHF also has a GPS built in, the radio is ready for sending out an emergency call with our MMSI number and position by pressing the emergency button. The radio is also receiving AIS (Automatic Identification System) signals from other ships. This information is sent on to the plotter but also displayed on the VHF screen, where information from the other ships can be seen. The VHF has DSC so it will sometimes receive alarms, mostly from the coastguard. The alarm is cancelled by pushing the large channel button.

In addition there is a handheld VHF under the chart table. It is operating on normal batteries and the batteries must be taken out when not in use since the VHF otherwise will drain the batteries.

Motor

The motor is Volvo Penta D2-55-F with gearbox MS25A from 2015. The gearbox has a gear ratio of 1:2.23. The propeller axis is 30 mm, taper 1:10, woodruff key=10x60mm, propeller is right hand drive. The gearbox was put in new in 2018, broke, and new put in in 2019.

The motor should use very little motor oil and it should not be necessary to add oil for around 50-100 hours.

The gearbox should not use oil at all.The oil mark is 1cm from the bottom of the pin. IT IS USING THE SAME KIND OF OIL AS THE MOTOR, NOT HEAVY GEAR OIL. Do not add oil if you are not sure what you are doing. Too much oil in the gearbox will ruin it.

The cooling liquid should be between min and max. It seems that if the level is near max, the motor uses the liquid while if the level is near the minimum (see picture below), it does not consume liquid. So keep it low.

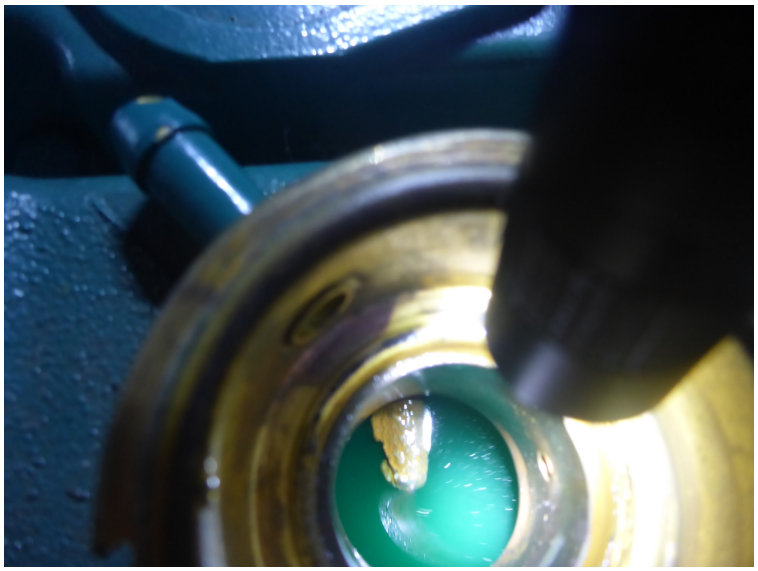

Cooling liquid near the minimum mark, the yellow metal pin sticking out.

Water

The boat has 2 tanks. The main tank contains 300 l and the spare tank 50 l. The main tank has a gauge and it has the following water content:

¾	160 l
½	95 l
¼	45 l

The tank is 28 cm deep, shape unknown. The sensor is 26 cm long with the spec: Osculati, 2716130, 2012-29.

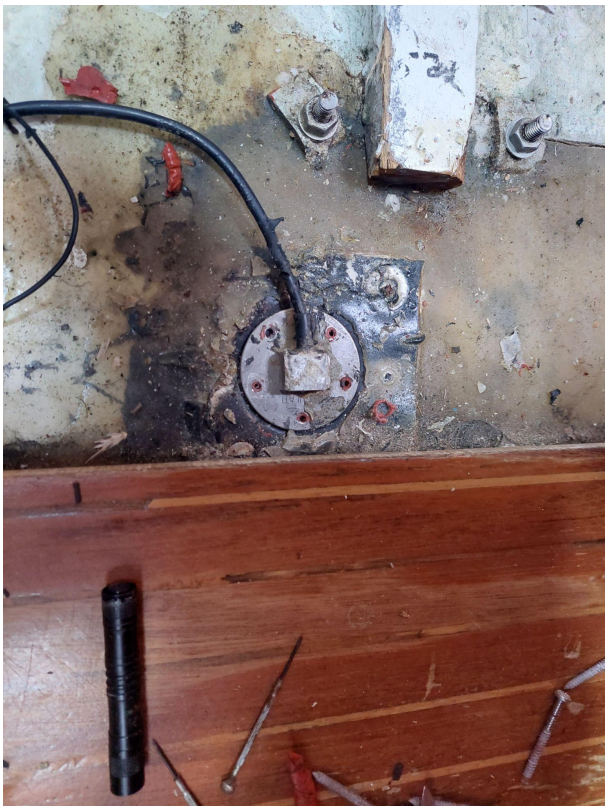

Water sensor, under the table.

The spare tank has no gauge. The main tank is filled from the right hand side of the boat and the spare tank from the front. The spare tank is located in front of the boat and is higher than the main tank, which is in the keel. In order to use the spare tank, the water must flow to the main tank by opening the valve under the floor in the front cabin.



Location of valve for spare tank

Toilet

The toilet has a holding tank of about 40l. The toilet only functions properly if regularly maintained: Put in cooking oil and suck it into the pump until it operates smoothly. The schematics for the system is shown below. With the main valve closed and the outlet valve open, output from the toilet can go to the sea. If the outlet valve is closed and the main valve open, output goes to the tank. If the toilet valve is perfect, no backflow into the toilet will occur in this position. But if not perfect, backflow can happen from the tank and the main valve should be closed. So the safest is to have both valves closed when the toilet is not in use. To empty the tank, open both valves.

Deposits will build up quickly if there is a mixture of urine and seawater in the hoses and valves, so when flushing urine, flush completely. The system should be cleaned regularly by putting in vinegar when the toilet is not used for some time.

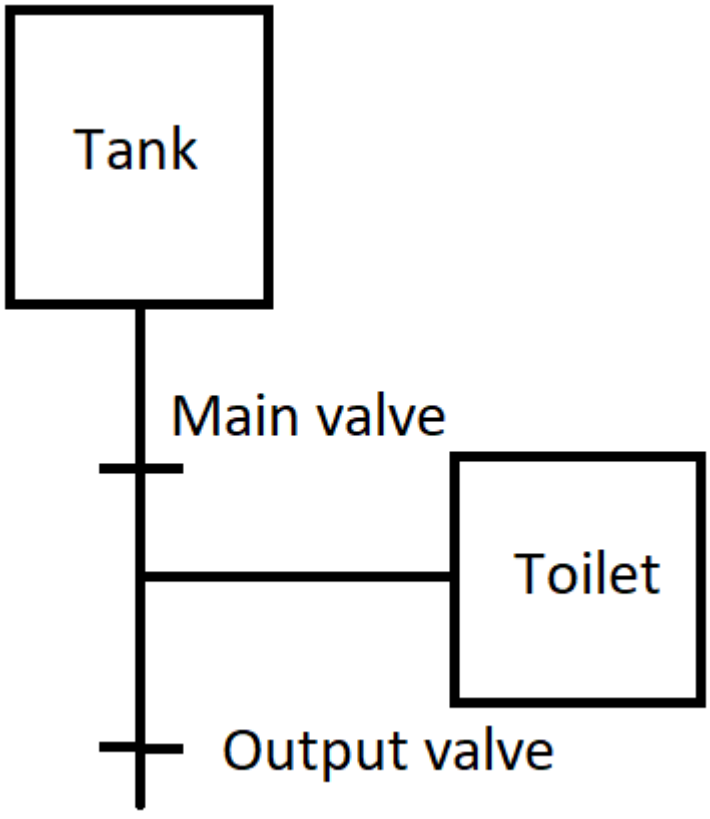

Schematics of the toilet system. With the main valve closed and the outlet valve open, output from the toilet goes to the sea. With the output valve closed and the main valve open, the output goes to the tank.



Toalet system. The blue valve is the main valve. The outlet valve is not seen and is at the floor.

How to empty the holding tank: Open the main valve and the outlet valve.

Waste water pump indoor shower:
To avoid waste water from indoor showers at the toilet to end up in the spoilvater bassin in the keel, we drain the water out of the bathroom with an electrical pump. The energy source is the bow thruster/ anchor battery in the front, with a fuse on the cable. See image. To activate the pump, press and hold the switch under the sink in the toilette room.

Safety

Life vests

All vests are under the right hand bunk in the front cabin. There are 8 wests in total. 3 vests have a built-in harness and there are 2 children's vests, one of size 15-30 kg and one of 30-40 kg.

Liferaft

The liferaft is a Seago 6 person ISO 9650-2 which means it is certified for offshore use. It is equipped with supplies for 24 hr (water etc). The liferaft was new as of April 2018 and serviced May 2025.

Smoke detector

Located in the main cabin away from the kitchen to avoid alarms when cooking. It has a 5 year battery, last changed in 2024.

Gas detector

Located under the stairs. It is permanently on when the service battery is on. Its fuse is behind the wall with the main switches. .The old gas detector does not work and has been disconnected but not yet removed.



Gas detector (right) and smoke detector (left).

VHF emergency call

The VHF has an emergency button. Lift the red lid and push the button and a Mayday and the position of the boat and boat name will be transmitted. Wait for a response on channel 16.

Location of valves through the hull

In case of water coming in, it is important to know where all valves are. All valves, are now composite so no more corrosion.

There are 6 valves. From the front:



Water to toilet, under floor of front cabin. Also seen is the depth sensor (left) and the speed sensor (front). The loose plastic tube has a plug to put into the speed sensor hole when the speed sensor is taken out for cleaning. The cables are for the bow thruster.



From toilet sink, under the sink



From toilet and holding tank

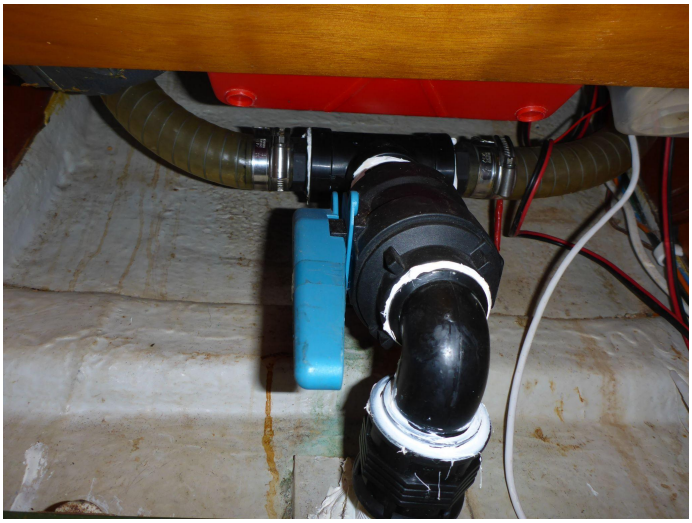

Drain from deck, left side, in cupboard below instrument panel.



Drain from the kitchen sink, below the cupboard.



For cooling water, in the motor room.

All valves should be turned once during each visit to avoid that they become fixed.

Wood plugs for a broken valve are located under the chart table seat.

Bilge pumps

There are 2 bilge pumps, one electric and one manual. Both are placed over the diesel tank. The bilge pump can be put in automatic operation or manual operation. In automatic operation there is a level switch at the bottom of the bilge so the pump starts automatically when the water level is more than about 10 cm. The electric pump is connected directly to the service battery so when the main breaker is off, it still works. When leaving the boat for longer periods it should be on automatic mode.
There are no spares for any of the pumps. The manual pump might clog up but it is easy to dismantle and clean.



The manual pump is yellow and the electric pump is on the back wall. The handle for the manual pump is on the wall to the left (not seen).

Electrical system

The system is based on the original HR installation with the addition of new circuit breakers. The original system had fuses, the modified did not, now fuses have been added again. All original lamps and lanterns have been replaced with LED lamps.

The batteries are charged by the motor and the service battery in addition, by the solar panels. In addition to the service battery, there are batteries for bow thruster, front winch and starter motor. These batteries are only charged by the motor and the 220V power supply (shore power). The service battery has a capacity of 200 Ah, the winch battery 120Ah, the start battery 80Ah and the bow thruster battery has 2, 70Ah batteries.The total battery capacity is therefore high. The service battery is a lithium battery and therefore has a better capacity than a conventional battery. The battery can be completely discharged without damage and it will charge very rapidly. In the front there is no longer a need for different batteries for winch and bow thruster, this is a legacy from the time with a 24V bow thruster. In the future they should be replaced by one battery. That would also simplify the charging circuit. An overview of the schematics is seen below. See figures of actual units later.

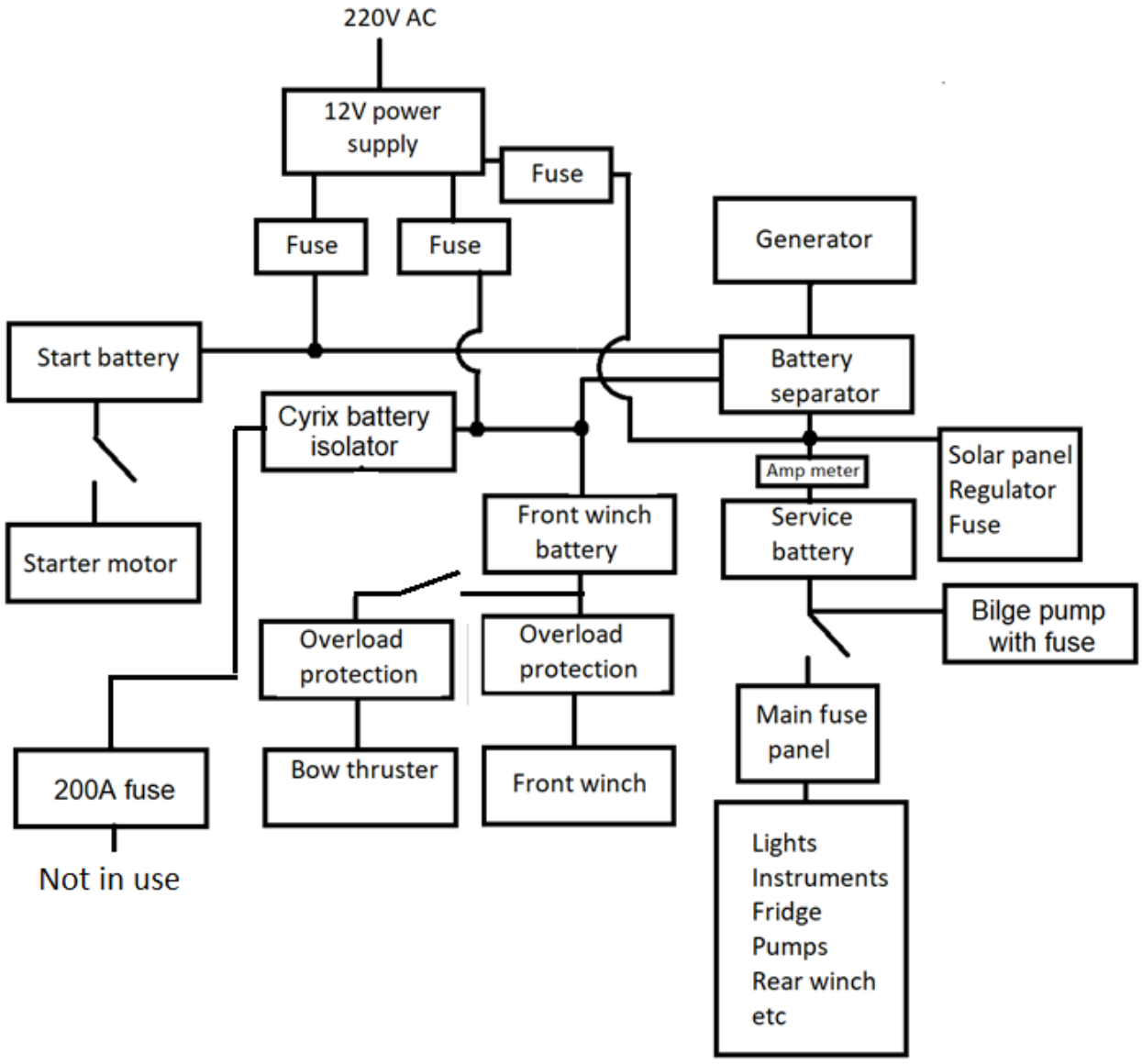

Schematics of the electrical system. All units have a common negative ground.. The ampmeter shunt is in the negative connection to the service battery so not as shown in figure on the positive side. The two switches shown are the main switches under the stairs.

Notice that cables for charging the old thruster batteries are no longer connected but can be used if another battery is needed. The cables end under the front left bunk.

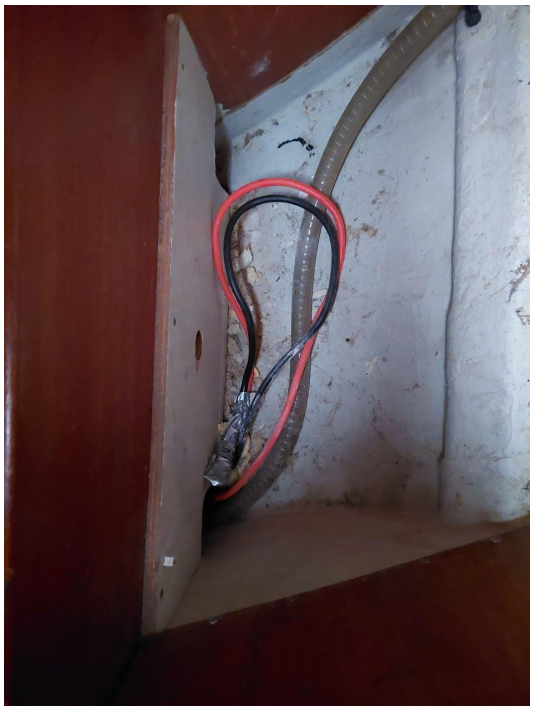

Cables for used charging the old thruster batteries

Batteries

There are 4 sets of batteries, starter battery, battery for the bow equipment (anchor winch, bow truster and shower bilge pump), and service battery. The starter battery and the service battery are in the rear cabin under the bunks. The bow thruster and front winch battery is under the bunks in the front. The service battery and the starter battery can be turned off with the switches under the stairs, but the front battery is always on. The start battery is only used for motor start, front battery for the bow thruster, anchor winch and shower bilge pump. While the service battery is used for the rest including the rear anchor winch.
The bow thruster battery and the front winch battery are located in the front to avoid power loss with long cables.



Service battery, the shunt for the amp-meter is seen.



Front winch and thruster battery.

The battery separator and main switches are seen below. These are located in the motor room.

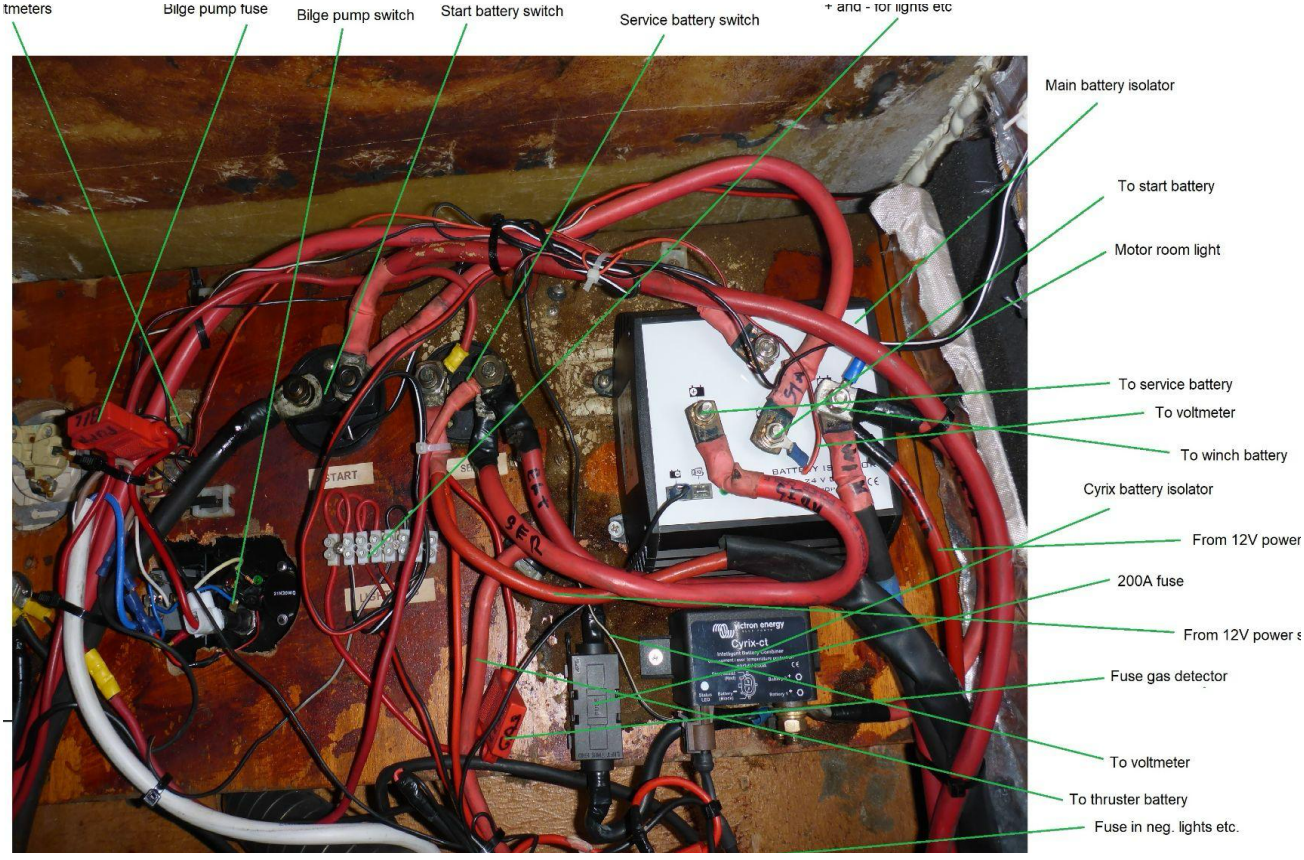

The battery separator (right), the two main switches (top), fuses for bilge pump, light over sink and in the motor room and gas detector, switch for bilge pump (middle left) and common ground (far left, not seen). Most of this was rewired by the electrician Svein used, August 2021.

To get access to the above elements in the motor room, a plate with insulation in front of the switches must be removed first. The plate is fixed with two screws near the motor room door. Remove the screws, pull the plate down a bit and then pull it out through the door.

Monitoring the voltage of the batteries

All batteries have a voltmeter for monitoring the voltage. The service battery has in addition an ampmeter to measure current in or out of the battery. The starter, winch and bow thruster battery voltmeters are located under the stairs and the voltmeters are turned on with a switch, see figure below.



The three voltmeters for monitoring winch and start batteries. The thruster battery is no longer there

The connection of the 3 voltmeters under the stairs is seen below.

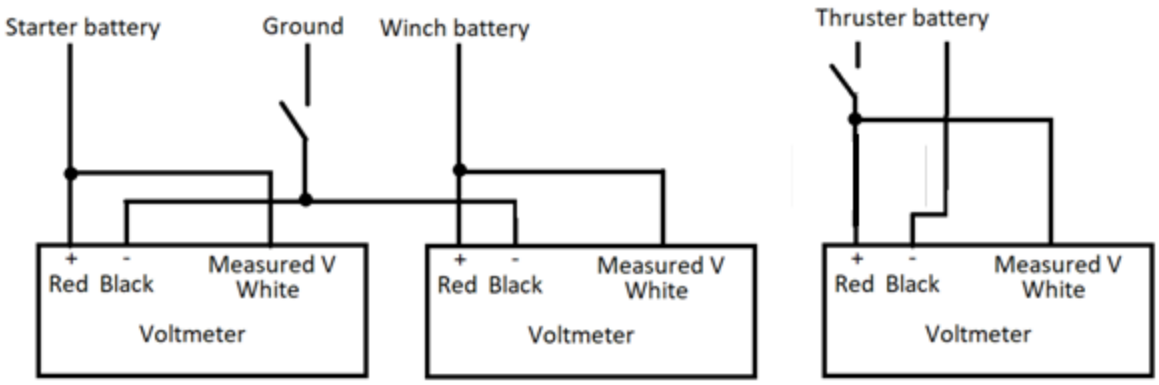

The connection of the three voltmeters under the stairs.

The voltmeters are powered by the battery it is connected to to measure voltage. Remember to turn off the voltmeters when not used since they will eventually drain the batteries when the motor is not running (like 1-2 months).

The battery monitor for the service battery is located with the instrument panel with the switches, see figure below.

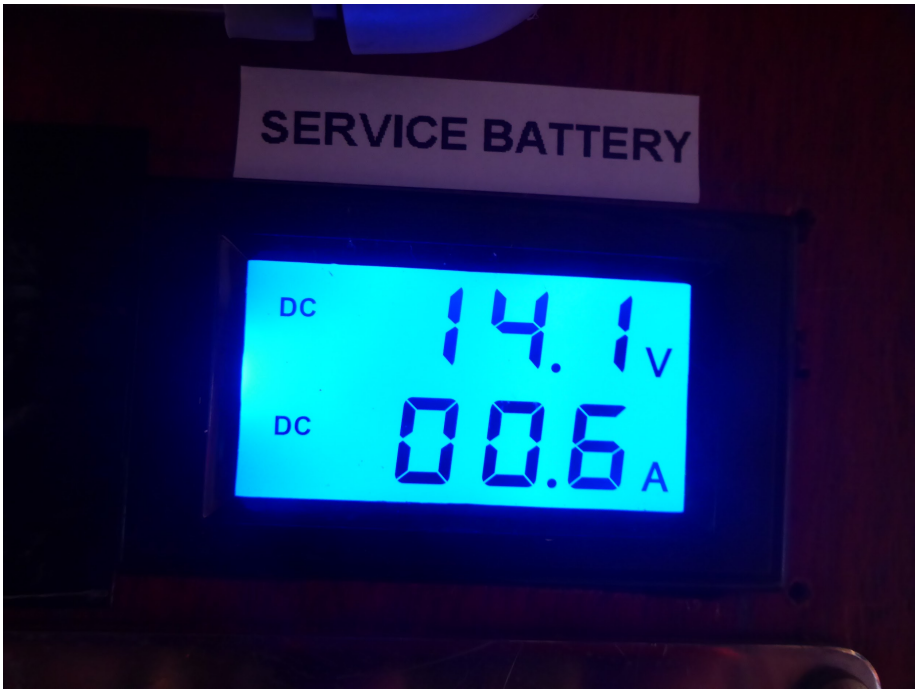

The voltage and current in or out of the service battery. In the above example, the battery is nearly fully charged (voltage is near maximum charging voltage) and only 0.6 A goes into the battery. When current goes out of the battery, the ampere will show a minus sign.

The amperemeter requires an independent power source and is operated by a small DC-DC converter.

The total current in or out of the service battery is measured by the ampmeter. So when the sun is shining, it is usually positive, even with the fridge running while in the evening it will be negative. When the motor is running after a long stop, it is seen that the charging current is high. The ampemeter is a very useful tool to follow the charging and discharging of the service battery. In addition, the voltmeter measures the voltage of the service battery directly so the voltage shown is not affected by voltage loss in wires.

State of charge of the batteries and charging voltage

The state of charge of a lead acid battery can be deduced from the unloaded voltage of the battery. So, some time after the battery has been charged and little or, no current, is being used, the battery voltage will show the state of charge approximately as

12.8 100 %
12.6 80%
12.4 60 %
12.2 40 %
12.0 20 %
11.8 0 %

The voltage is a bit dependent on the manufacturer of the battery and temperature. Standard lead acid batteries, as used in Hera II, do not support many discharges below 20-40% so the unloaded voltage should not drop much below 12.2V.

The lithium service battery behaves differently. It has a voltage of about 13.4V when 10% discharged, 13.0V when 50% discharged and 12.0V when 90% discharged so the voltage drops very little when discharging.

Percentage (SOC)	12V
100% Charging	14.6
100% Rest	13.6
90%	13.4
80%	13.3
70%	13.2
60%	13.1
50%	13.0
40%	13.0
30%	12.9
20%	12.8
10%	12.0
0%	10.0

When the motor is running, the charging voltage should reach 14V or a bit more. If the voltage remains below 13V, there is a problem with the charging system.

Solar panels

There are 3 solar panels: The main panel (110W) is mounted on a pole at the back end of the boat and two small panels (35W together) are on the side below the windshield. They are connected to the service battery through a MPPT (maximum power point tracking) regulator. The connection is as shown below.

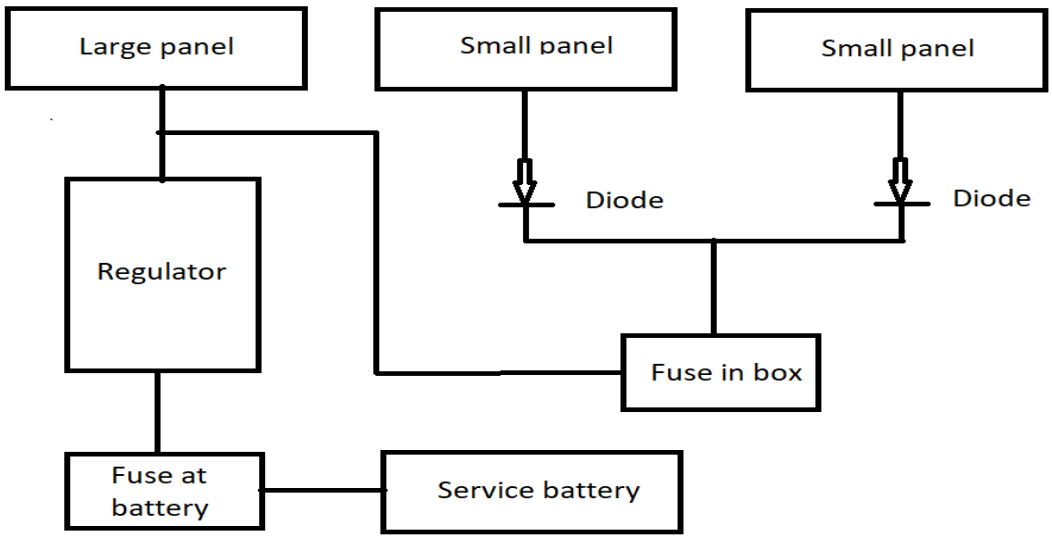

Solar panel interconnection.

The diodes are installed to prevent one panel from leaking current into another and are often built into the solar panel. It is unknown if the main panel has a diode but since the other 2 have diodes, it should be ok.

The MPPT regulator will maximise the input power so the charging current will, most of the time, be larger than the current given by the solar panels. This is because the panel gives out up to 20-21V output but the battery only needs 14V to charge. The regulator display gives information about several parameters: Voltage at solar panel, current from solar panel, voltage at service battery, charging current to service battery and total number of kwh charged since last reset. The remaining parameters shown are not relevant since the output from the service battery is not passing through the regulator.



Solar panel regulator. The sockets below are for 12 to 220V converter power (top) and shore power (bottom). Under the socket is seen the USB charger.

If the main solar panel is rotated to follow the sun about every 3 hours, it seems that the solar panels will produce more power than needed even with the fridge running all the time.

If there is a lot of wind or when leaving the boat, put the panel in a horizontal position to minimise the effect of the wind and maximise the charging.

Fuses

All (or nearly all) circuits are now protected by fuses. Most fuses are in the cupboard behind the breaker panel, see figure below. Spare fuses are in a box in the cupboard behind the breaker panel. Some fuses in the main fuse panel are used for several equipment units:

12V socket in bathroom: Cabin lights
Compass light: Breakers
Light in cockpit: VHF
12V socket in cockpit: Instruments COP.

In addition there are fuses located near some individual units:

Fridge: Located under the kitchen sink.
Radio: It also has a fuse directly on the radio.
Bilge pump: located with the main switches.
12 to 220V converter: It has an external 50A automatic fuse and an internal fuse (150 A) which cannot be replaced.
Shore power 220V to 12V output has two 40A automatic fuses sitting next to the power supply and a solid fuse (unknown size).
Lights above sink and in the motor room, gas detector: Located with main switches for batteries.

Two fuse panels inside of the door with switches. Spare fuses are in the cupboard with the fuse panels.

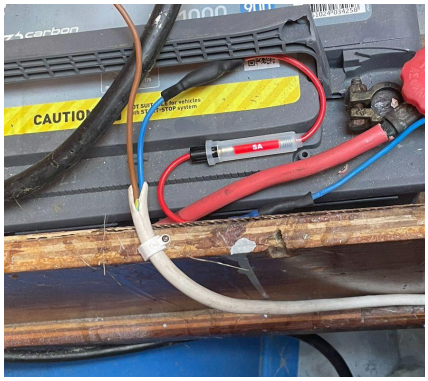

Waste water pump indoor shower:
To avoid waste water from indoor showers at the toilet to end up in the spoilvater bassin in the keel, we drain the water out of the bathroom with an electrical pump. The energy for the pump comes from the bow thruster/ anchor battery in the front, with a fuse (5A) on the cable. See image.

Fuses for winches and bow thruster

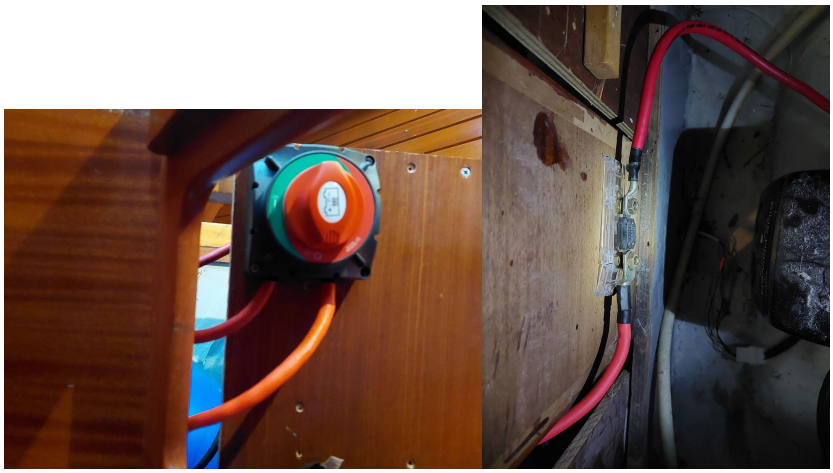

Right: Solid 400A fuse for the bow thruster, located with the thruster. Left: thruster on-off switch located under the front right bunk.

The automatic fuse for the front winch is located on the wall in the front cabin.

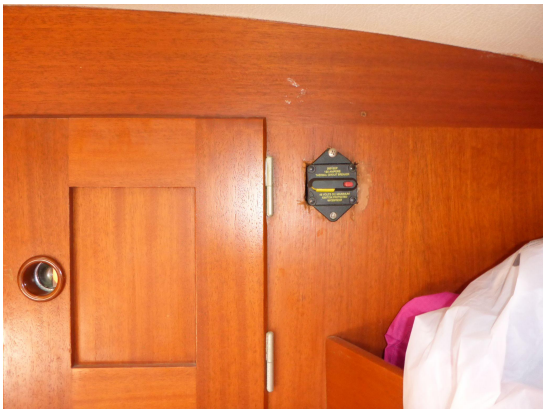

Automatic fuse for front winch.

Stern winch: The automatic fuse is located in a box in the cupboard in the rear cabin.



Automatic fuse for the stern winch, in the rear cabin cupboard.

Fridge

The fridge got a new compressor in 2025 and a new cooling plate inside the box. The temperature can be regulated between approximately -2 and 10 degrees. The fridge has a fuse under the sink and there is a switch there to turn it off. The temperature in the fridge can be seen on a small



display.



Switch for fridge, shown in off position. The switch is actually a large fuse



Temperature of fridge and thermostat.

Car radio and outdoor thermometer

The radio is connected to all 4 speakers and is a standard FM radio with input from a memory stick. The antenna is behind the radio. Next to the radio is the in and outdoor thermometer.





In and outdoor thermometer, radio and location of outdoor sensor in cockpit.

Bow thruster

This is operated from the cockpit. There is no longer an on off button, so it is always on unless the main switch is turned off.. The bow thruster is located inside the boat, new in 2020. It is a Sleipner SE60. The power is 3100 W or 4.0 HP. The bow thruster has its own battery in the front, left hand side. Currently it has 2 batteries in parallel.



Bow thruster. In front is seen the flexible extra water tank.

220V inverter

The 12 to 220V innverter is in the cupboard behind the 220V sockets. It is turned on with a switch on its side. Use position 1, the other position is for automatic operation, which requires a minimum load so it might not work for all equipment. Our advice is to always in position 1, and use the fuse for on/ off.



The 12 to 220V AC innverter. Note the position 1 to use, the green light will then be turned on. Currently there is a tape keeping it in position 1 and the main fuse/switch should be used to turn on and off in order to avoid that position 2 is used, might damage the inverter.
The converter output is protected with a 50A automatic fuse seen to the right. On top is seen the fuses on the 220V shore power input.

It has a nominal capacity of 800W and provides a pure sine wave output so it can be used with all types of equipment.. The converter has an external 50A automatic fuse on the input and there is a 150A internal fuse, which apparently cannot be replaced. Remember to turn the converter off when not in use since it uses 0.5A with nothing connected. If the converter is overloaded, it will shut down. DO NOT CONNECT A HAIRDRYER TO THE CONVERTER, it uses too much power. The current vacuum cleaner in the boat can be used if you run at half power.

Smaller loads can be operated for a long time. The small fan in the boat used 16W so about 1.5A so this would only drain 15Ah for 10 hours.
The converter is connected directly to the service battery without passing the main switch so remember to turn it off when the service battery is disconnected.

Shore power

The shore power socket is located in the cockpit. It connects the 220V to the 12V power supply located in the rear cupboard (next figure). 220V can then ONLY be taken out directly near the instrument panel, see figure with solar panel regulator. There are some 220V sockets here and there in the boat but they are not connected to shore power and remain from an earlier installation, and should be removed. The shore power is connected through a fuse box, see figure below.

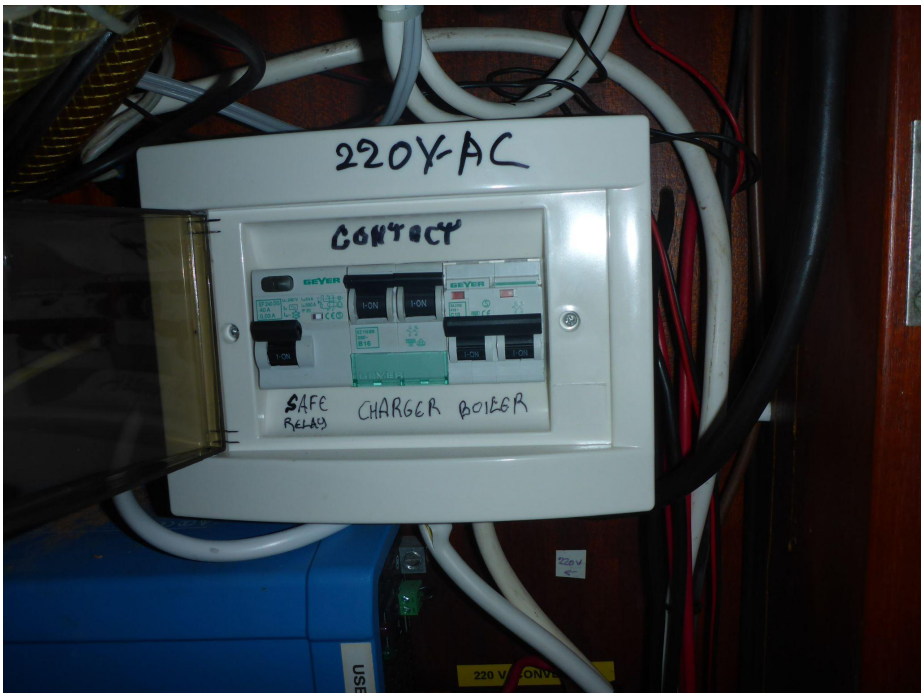

Shore Power fuse box. To the left is a ground fault circuit interrupter, the middle fuse is for the 12V charger and and the right to the boiler. Installed in August 2021.

The 12V output from the power supply has a built in battery separator and can be connected to 3 independent batteries. It is connected to the service battery, the start battery and the front winch battery (see electrical connection diagram).

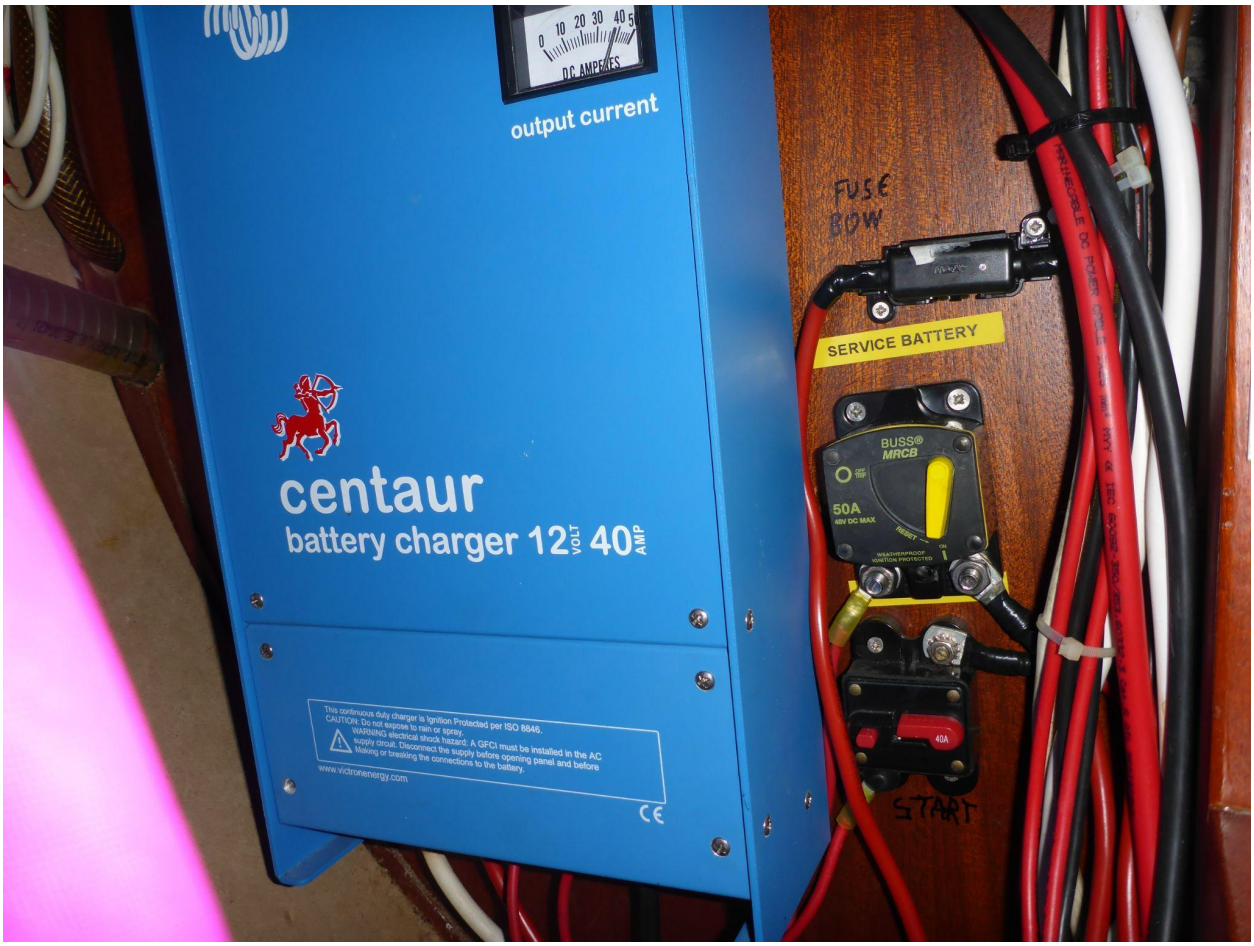

12V power supply. The solid fuse (top right) to front winch battery charging and two automatic fuses on the output to service battery and start battery are seen to the right.

Instruments

Most instruments to use when under way are located in the cockpit, see figure below.



Instruments in the cockpit. From left: depth-speed, autopilot, plotter, VHF and wind.

Some of the instruments are turned on below with switch ‘Instrument COP’. This will give power to the wind, depth, plotter and display of autopilot. For using the autopilot, an additional switch must be turned on below. The VHF always has power.

Plotter

The plotter is turned on with a button lower right, then accept conditions. It will come up with the screen it had when turned off, usually the map. If the home screen comes up (shows icons for chart or sonar), press Chart to get the map or press top right icon to get chart and sonar together. The plotter uses C-map and it has been updated to the latest software (April 2018), however, the manual is a bit older.
The plotter has been set up to always show north up and the position line (blue) in front of the boat is 10 miles long. It will show the track followed with a red line. When the VHF is on, other ships with AIS will be shown as larger triangles pointing in the direction the ship moves. Some map operations:

Zoom: use + and - buttons. It will zoom centred at the position of the crosshair.

Distance and direction from current position to another location: touch the screen and the cross hair comes up and distance and direction are seen in the lower left corner.

Move the map: touch the screen and drag the map.

Put the boat in the middle of the screen and remove cross hair: touch ‘Clear cursor’ on top right of screen.

Information on AIS targets: touch the ais symbol and the name or number of the ship is shown. Touch the name or number, a page with full information comes up. The most important is CPA (closest point of approach) which shows how close you pass the ship if both keep the same speed and direction.

System controls: press on-off button shortly.



Our boat going west is shown with the small closed triangle. Behind is seen the red trace and in front a part of the position line (blue). Below is a ship (AIS target) going east shown with an open triangle and a dotted line.

Sonar

If the plotter is showing the map, press the Home screen button (upper right hand corner) to get option and then press Sonar on the screen. The sonar can also show fish.

Autopilot

When turned on, it will show standby. Fix the belt at the steering wheel and press auto and the boat will continue in the current direction. To change course 1 or 10 degrees, press respective buttons. The headings shown on the autopilot and the plotter will be a few degrees different due to the autopilot showing magnetic north and the other true north. A larger difference can be observed when sailing or when there is cross current since the boat then is moving sidewards. The sensitivity of the autopilot can be adjusted from 1 to 9, the value when turned on is 5. Unless it is very quiet, this is too sensitive and the motor will be working too much. To temporarily change the sensitivity, press +1 and -1 at the same time and the adjustment screen comes up. Press +1 or -1 increase or decrease the sensitivity, respectively. Sensitivity 2 or 3 seems to be a good choice in most cases.

Depth and log

On top is shown depth. If the depth is more than about 100 m, the depth display will start to blink to indicate that depth cannot be measured. The sonar can measure several hundreds of m's depth. The display shows speed and at the bottom there can be different information. To cycle through that, press trip. The speed is measured with a paddlewheel located in front of the boat and the accuracy of the speed will depend on how dirty the wheel is so the log might have to be adjusted frequently:

1 Press depth and speed buttons simultaneously for 2 seconds
2 Press speed button until CF (correction factor) comes up at the bottom, the factor is near 1.5
3 Adjust the factor with the trip and reset buttons
3 Return to main screen by pressing depth and speed buttons

The correct speed can be estimated from the GPS speed on the plotter. Assuming no current the GPS speed will be the correct speed through the water. If current, but no wind, to get the correct speed through the water motor in one heading, notice the GPS speed. Then motor the opposite direction and notice the GPS speed. The correct speed through the water will be the average of the two speeds.

VHF

The VHF is turned on by pressing the pwr/vol button. It will then come up with the display it had when turned off.

Changing channels: Turn the large round knob, channel 16 by pressing the red button shortly, channel 9 by pressing longer. Or using the arrows on the handset.

Since the VHF has built-in GPS and AIS receivers, it can show SOG and COG and location of other ships with AIS, independently of the plotter. To cycle through the two main displays, press the AIS button.
The AIS display shows a small map (no contours) with North up. The arrow in the middle shows which way the boat is moving. The two rings show the distance to the boat, often at 5 and 10 miles (easy to change with the soft keys (keys with a '-'). Other boats with AIS will be shown with a small dot with a direction arrow to show in which direction they move. A list of the boats with names, CPA etc can be displayed with the soft keys (see manual), but it is easier on the plotter.



VHF display corresponding to the plotter display above. In the middle is seen our boat going west, just below is the ship (AIS target) going east also seen in the plotter figure above. In addition there is another ship going west about 8 miles to the west. In this example, the VHF has been set up to show all AIS targets 10 miles from our boat. The display shows position, speed and heading.

Other practical aspects

Washboards

Washboards can be stored under the rubber bands:



Shade

The boat has a system for covering the cockpit and part of the cabin. Explanation to come…..
The small bimini made by Roald is seen below:



Small bimini

A simple system is to put up a parasol fixed on to the fish rod holder. The parasol must be fixed from the side and then turned in. It can be inclined if the sun is on the side.



Parasol in 2 different positions

There is also a two-piece sun sail. This is large and heavy, but covers the boat from the mast to the stern. Really a good shade on hot days. Start by placing the largest part on the boom forward by the mast. Attach the thin ropes down to the lifeline/ (rails). Roll out aft, and attach the ropes to the lifeline. Make sure that the rear part ends at the boom lift. Here, the smallest part is connected by a zip-lock. Attach to the back stay, stand for solar cells and to the lifeline.

This solar sail reduces the solar heating of the boat from the mast to the stern stay. It is large, heavy, not beautiful and collects a lot of wind, so fasten it well.



Large sun sail

Tables

There are two tables and a glass holder.



Small table and glass holder.



Big table.

Procedures with port police and customs

First launch in spring:

Get a paper from Ionion stating the time interval the boat has been on land. Go to customs to get the transit log (TL), you must have insurance, TEPAI and the paper from Ionion.

Before you leave customs, make sure they change the name of the skipper in the TL, to your name.

Go to the port police (PP) with all papers and fill in the details in the crew list (with passport numbers etc.) Bring all the passports with you, when you go to PP. (From 2024 they no longer

accept our pre-filled, homemade crew list. From now it is the Greek version that is valid) and to get a stamp in the transit log.

At PP you must say where you will go. If you choose a harbor with port police and then do not go there, we can get potential problems (a fine) because the stamp will be missing in the transit log, so choose a harbor without port police, e.g. Kalamos. Then you are free to go wherever and do not need a new stamp until you get to the harbor with port police.

Boat on land, not first launch so transit log is on board:
Do all of the above, including go to customs, to update the name of the skipper.

Change of crew: crew ending trip must go to the port police to get å stamp. Crew taking over must go first to customs to update the name of skipper, then to port police for a new crew list to get stamp. It is crucial to get the name of the new responsible skipper mentioned in the transit log, when you do the crew change.

Boat on land for the winter:
Go to the port police to get a stamp. Get paper from Ionion saying the boat is on land. Go to customs to hand in the transit log and put papers back in the boat.

Other papers:
You can be asked for the boarding pass to show when arriving in Greece (very rarely). Formally, the port police can ask for a boat certificate (not often) so bring it to avoid problems.

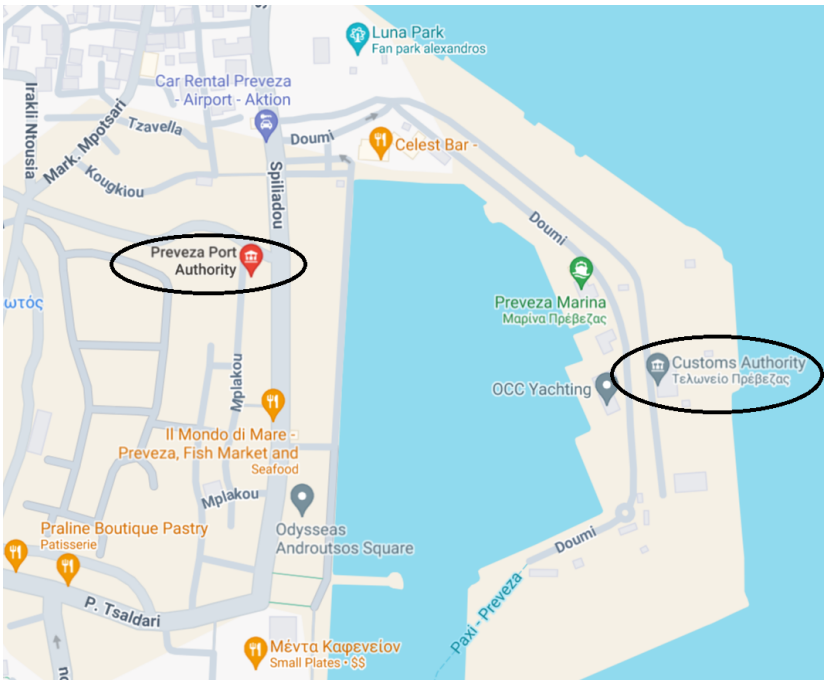

Location of port police and customs

Taking the boat on land at end of season

Book a time for lifting the boat with Ionion.

Make sure the holding tank is empty before lifting. Afterwards the hoses should ideally be filled with vinegar to dissolve the carbonate

Remove the front sail and store below. Sail bag in rear cabin.

Get a stamp at port police, either before or after lifting the boat but within 24 h.

Put the boat on land, make sure it is pressure washed. There is often room at their pontoon, either the same day or the day before. It is also a good place to anchor.

Order change of oil in motor and gearbox and change of all 3 filters. Ideally it should be done before taking the boat up but hard to arrange with Ionion. There is equipment on board if you feel like doing it.
Order change of impeller if not done the year before. In 2028 it must be done.

Check the boat for damages and wear, make sure to check cutlass bearing so we can see if the propeller axle makes it wear out.

Work to be done by Ionion can also be ordered later, but it is important to find anything that potentially should be fixed by them so somebody can come and have a look before you leave.

Wash and deflate the dinghy, store on deck under the tarpaulin.

Cover the boat with the tarpaulin. It covers the whole boom, and it is pulled a bit further in both ends. It is tied to the sides with short pieces of rope and every hole in the tarpaulin is used. If there is not one on board (in the aft cabin), buy one (4x6 m), the heaviest you can get. The shop in Ionion has it, but there are also shops in town.

2026: There are 2 new tarpaulins in the storage room. Under the aft bunk near the rudder are 4 cowers for the hatches and elastic ropes for the tarpaulins.

Put the solar panel horizontally.

Turn off all electricity: the main switches under the stairs and the two switches in the front cabin. Turn off the fridge under the sink.

Get a paper from Ionion that the boat is on land and deposit the transit log with customs.

First launching of the boat in spring

Book a time with Ionion well before launching time.

Take off the tarpaulin and store it if it is ok for another season. It can be stored on the boat or in the storage room.

Inspect the boat for leaks, particularly for any sign of water in the motor room.

Check that all work ordered by Ionion (if any orders) have been done.

Connect all batteries and check the voltage (most accurate with a voltmeter).

Check that the motor starts. The starter motor can be seized if water has come in or the start battery is empty. If the battery is low, connect to 220v and charge the battery. Normally the battery should be ok with a voltage of about 12.4.

The outside of the boat will be dirty.. It is simplest to wash when on land since water is available.

Go to the Ionion office and pay, if not already done, and get the paper for customs.

Location of stuff

Spare parts

Many larger spare parts are located under the right bunk in the rear cabin, some under the left bunk. Smaller parts are in the cupboard under the contact panel. Most electrical parts are in the cupboard with the breakers including electrical tools like soldering iron, voltmeter etc. other parts are:

Cupboard:

Parts for toilet
Wood screws
Gas regulator

Under right bunk:

Filters: Oil filter(1), diesel pre filter (2), diesel fine filter on motor (1).
Impellers (1)).
Belt for generator.
Pump for toilet.
Fresh water pump
Couplings for fresh water systems.
Wires
Extra cooling liquid
Anodes for propeller with screws and o-rings, nipple to grease propeller.
Grease gun for the propeller.
Oil pump to take out oil of gearbox or motor.
Pieces of wood and plywood.
Old propeller..
Dinghy repair material

Left bunk:

Some hoses.
Bits and pieces.
Starter cables.

Wind scoop
Rat traps

Tools

Toolbox is in cupboard below switches
Larger tools or rarely used tools are in rear cabin, right hand bunk

Location of other stuff

Plugs for pipes: Under seat for chart table.
Life harness slings: Under seat for chart table.
Sail repair: In the cupboard in front of chart table
Elastic cords: ----------
Glue, paint, grease etc: Cupboard in front of chart table.
Motor oil, cooling liquid etc: Cupboard under the chart table.

Storage room

We have a storage room at the Ionion Marina. It is located in a container near the main office. The keys are in the boat.



Storage room shown with door open

Currently we have the old front sail, the new propeller, 2 bicycles and sets of bedclothes and towels.

Problems

No power to start motor

Use starter cables and connect to the service battery. It is not intended for starting but might work. If this is also empty, use the front winch battery which must be taken out and taken back. Finally the bow thruster battery could be used

Motor difficult to start and then stops

Could be air in the system. Open the air bleeding screw (10mm) and pump with the hand pump until no bubbles come out, close the bleeding screw, see figure below. Note the location of the bleeding screw is different from the illustration in the manual.

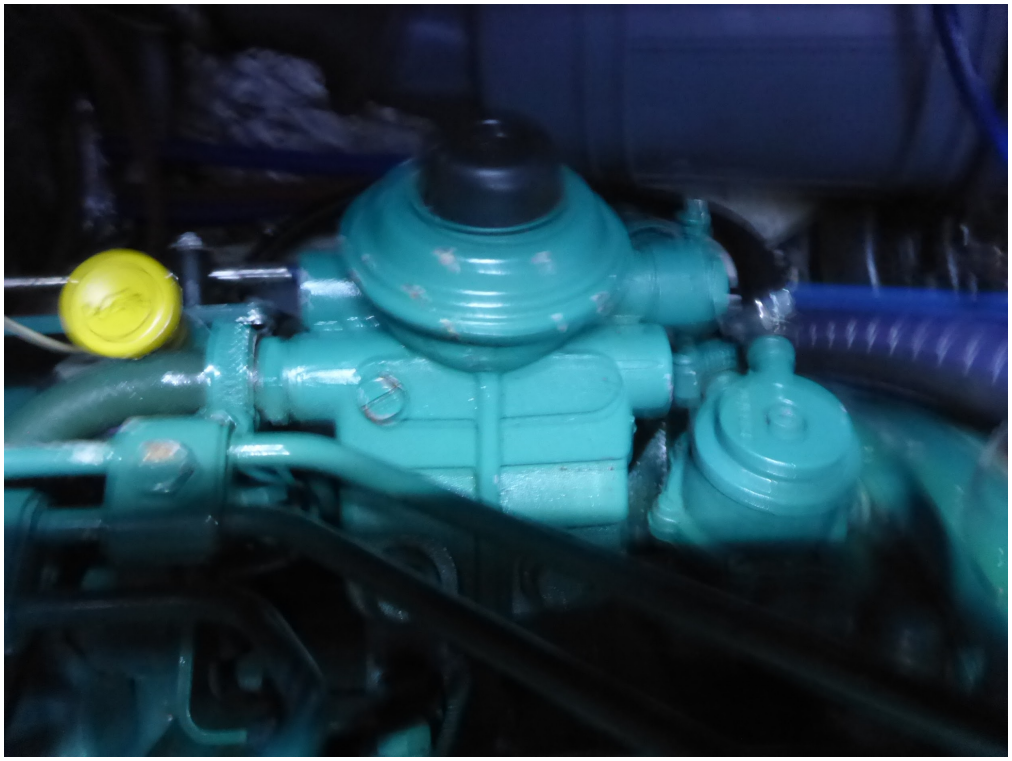

Hand pump (black rubber) for diesel and bleeding screw a bit down and left from pump.

Motor running irregularly or stops

Could be a blocked filter. It might be possible to keep it running by using the manual pump. If the diesel flow is blocked by a filter, there will be no return of diesel to the tank. This can be checked by taking off the return hose from the tank and see if any diesel comes out when the motor is running. If no diesel comes out, a filter is blocked (most likely the pre-filter). Note we have a special tool for hose clamps.

Fridge stops

Check the fuse under the sink, it has a bad connection. Also the connection to the fridge is a bit loose, and should be improved.

No fresh water

Check the filter in the valve. Is the pump running?

Last service or replacement of parts

In order to remember when things were done, here is an approximate list:

Exhaust albow, May 2026, Changed by Terje and Vasilis at Ionion
Salt vater pump, o-ring leakuage, change by Terje and Vasilis at Ionion
Motor oil and filters: Spring 2026 by Lars Erik & Roald.
Valves in motor: Spring 2025 by Ionion
New gearbox: July 2019
Oil change in gearbox: Spring 2025 by Ionion, checked -26, not changed by Lars Erik & Roald
Motor cooling liquid: April 2018. Checked and refilled -26 by Lars Erik & Roald
Impeller: Spring 2025 by Ionion
Salt water pump repaired: Spring 2023 by Ionion
Starter battery: September 2025 by Terje
Front winch battery: July 2021
Bow thruster battery: July 2021
Service battery: July 2021
Toilet pump: March 2026
Gas hoses: May 2019
Liferaft: New 2018, serviced spring 2025, next service 2028

Outboard: New 2019, serviced in 2021, new carburettor 2023
Fresh water pump, 2023, repaired old pump under bed in aft cabin
Fridge, new 2025.

Quick guide to paying TEPAI online

1.Registration Process

- Go to https://www.aade.gr/polites/etepai
- Change the language to English from the right top corner
- If this is first time to use the system,

Click the blue “Register” button for eTEPAI users

- Fill in the short form and wait for your confirmation email
- Click the HERE button in your confirmation email and login
    - If you have used the system before, click Log in for eTEPAI users, and log in as you did last time
- Click the new application button (in green)
- Fill out all the details that you can about your boat and yourselves.
- Click the green button at the top right labelled Temporary Submitted
- If this all looks correct then click the red Submit button
- You will get an email with 2 attachments. Print them both off or save them as

downloads, you will need to show these to the port police on arrival

2.Pay online the TEPAI Tax

Go to your online bank and enter:

- Recipient bank: BNGRGRAA (Bank of Greece)
- IBAN (field 59 of swift): GR1201000230000000481090510

- Remittance information see– eTEPAI payment code found in the submitted application copy you receive on e-mail, or if you log into the “eTEPAI online” website again.

- Take a screenshot of the evidence
- Press CONFIRM

A day later (up to 3-4 if over a weekend) you should see the money has left your

account. Login back into your TEPAI account to see if the money has been received.
Make a screenshot of the part where it is confirmed that the money has been paid.
However, I have experienced that this is not accepted so the whole application should
be printed again using the print option when logged in.

- When you go back to the application at the eTEPAI website and look into the eTEPAI for the actual year, you can see whether your payment is registered or not.
-
- When all I well, download the document and send by e-mail to Customs in Preveza for them to upload as a file to the digital transit log tel.prevezas@aade.gr